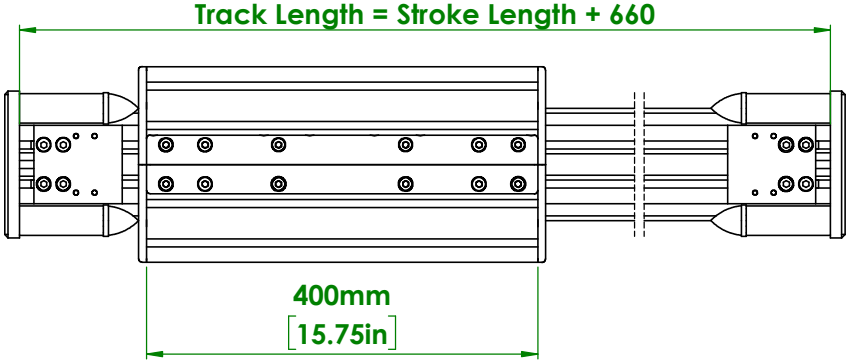

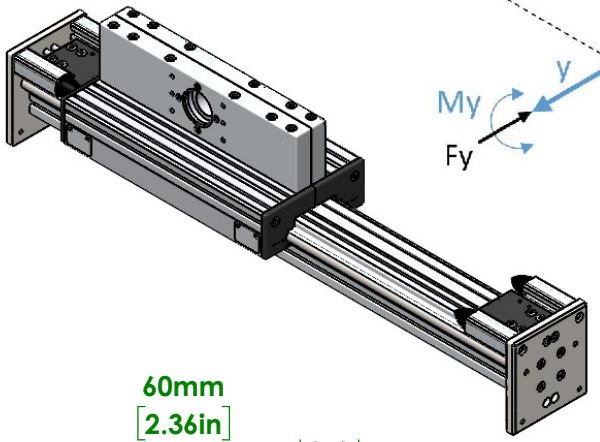

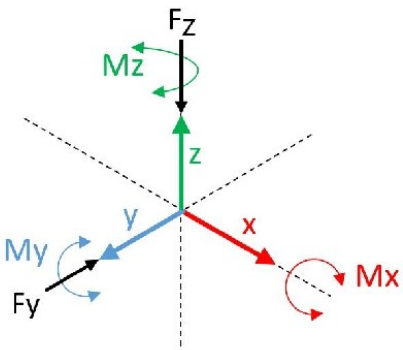

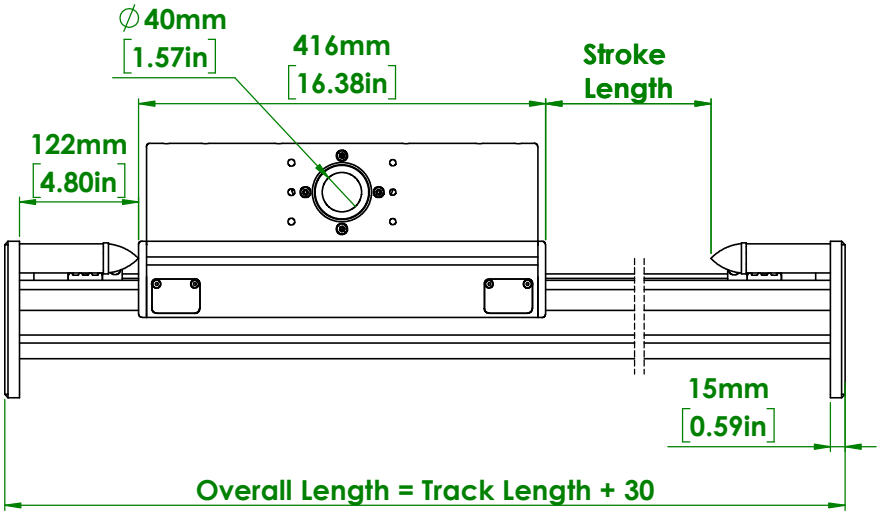

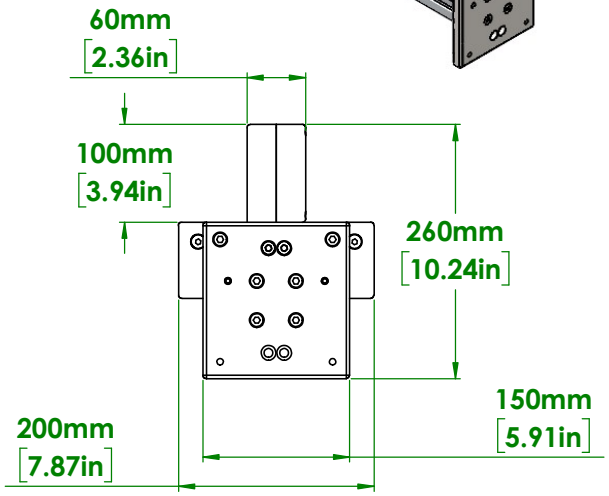

Max Dynamic Load (N)	Static Axial Load (Fz)(N)	Static Radial Load (Fy)(N)	Static Moment Load (Mz)(Nm)	Static Moment Load (My)(Nm)	Static Moment Load (Mx)(Nm)
1112	2000	3900	655	355	100
Max Speed	**Pulley Pitch Diameter (mm)**	**Pulley Torque (Nm)**	**Belt Tensile Strength (N)**	**Elongation**	**Carriage Weight (kg)**
8 m/s	89.13	70	3000	.1% @ 102 N	15.5

Location: X:\ENGINEERING\DRAWINGS\SL\Maytec Actuator Library\

PROPRIETARY AND CONFIDENTIAL
THE INFORMATION CONTAINED IN THIS DRAWING IS THE SOLE PROPERTY OF PALETTI USA, LLC. ANY REPRODUCTION IN PART OR AS A WHOLE WITHOUT THE WRITTEN PERMISSION OF PALETTI USA, LLC IS PROHIBITED.

UNLESS OTHERWISE SPECIFIED:
DIMENSIONS ARE IN MILLIMETERS

STANDARD TOLERANCES:
ANGULAR: ±0.5 DEG
ONE PLACE DECIMAL: ±0.1
TWO PLACE DECIMAL: ±0.05

FINISH:

	NAME	DATE
MATERIAL:	DRAWN cwysocki	4/13/2024

REVISIONS

REV.	REASON	AUTHOR	DATE

MayTec®
145 Keystone Drive
Montgomeryville, PA 18936
Phone: 267-289-0020

SIZE B | DWG. NO. PASL8050N

SCALE 1:10 | Sheet1 of 1