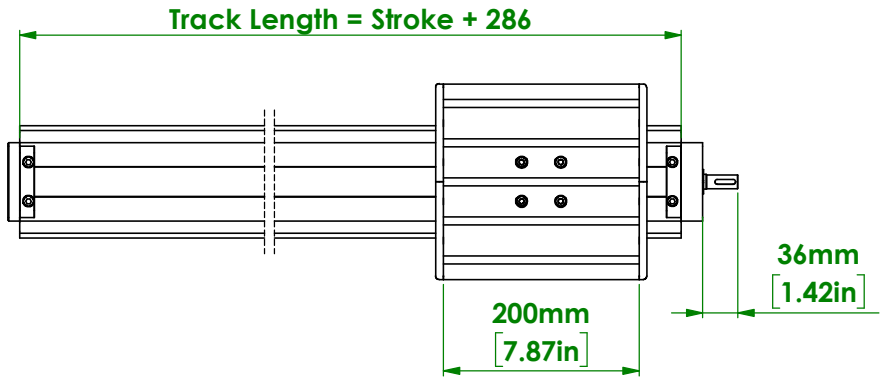

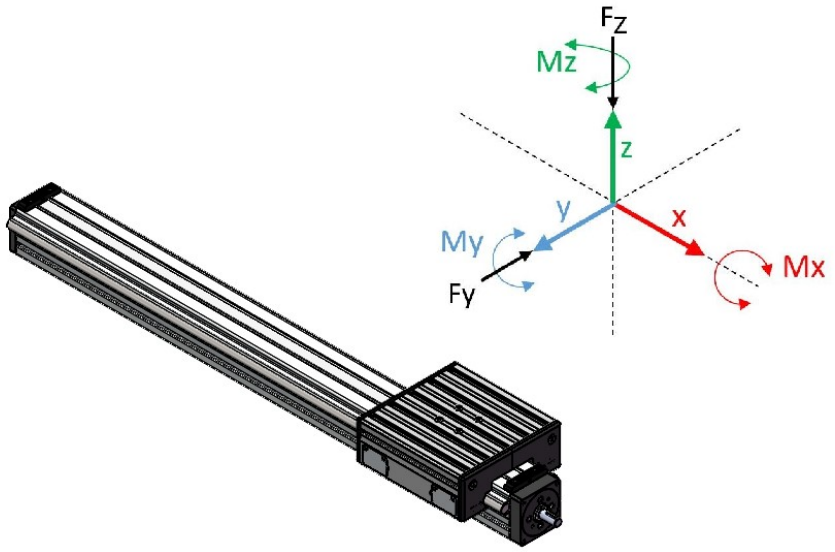

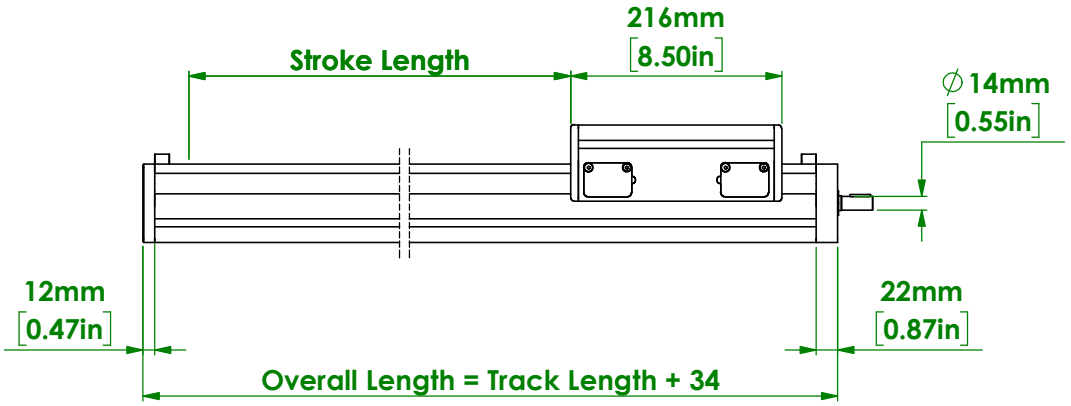

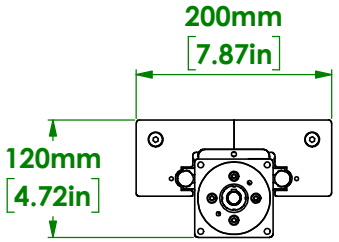

Max Dynamic Load (N)	Static Axial Load (Fz)(N)	Static Radial Load (Fy)(N)	Static Moment Load (Mz)(Nm)	Static Moment Load (My)(Nm)	Static Moment Load (Mx)(Nm)
1555	2000	3900	270	140	100
Max Speed	**Torque to Raise 1kN (Nm)**	**Ball Screw Diameter and Pitch (mm)**	**Screw and Nut Backlash (mm)**	**Movement Efficiency**	**Carriage Weight (kg)**
0.635 m/s	3.54	20 x 20	0.041	90%	6.4

Location: X:\ENGINEERING\DRAWINGS\SL\Maytec Actuator Library\

PROPRIETARY AND CONFIDENTIAL
THE INFORMATION CONTAINED IN THIS DRAWING IS THE SOLE PROPERTY OF PALETTI USA, LLC. ANY REPRODUCTION IN PART OR AS A WHOLE WITHOUT THE WRITTEN PERMISSION OF PALETTI USA, LLC IS PROHIBITED.

UNLESS OTHERWISE SPECIFIED:
DIMENSIONS ARE IN MILLIMETERS

STANDARD TOLERANCES:
ANGULAR: ±0.5 DEG
ONE PLACE DECIMAL: ±0.1
TWO PLACE DECIMAL: ±0.05

FINISH:
Saw Edge -A- // 0.1 A
Side -B- ⊥ 0.1 B
32

MATERIAL:

	NAME	DATE
DRAWN	cwysocki	4/13/2024

MayTec®
145 Keystone Drive
Montgomeryville, PA 18936
Phone: 267-289-0020

SIZE B | DWG. NO. PASL7007N

SCALE 1:10 | Sheet1 of 1