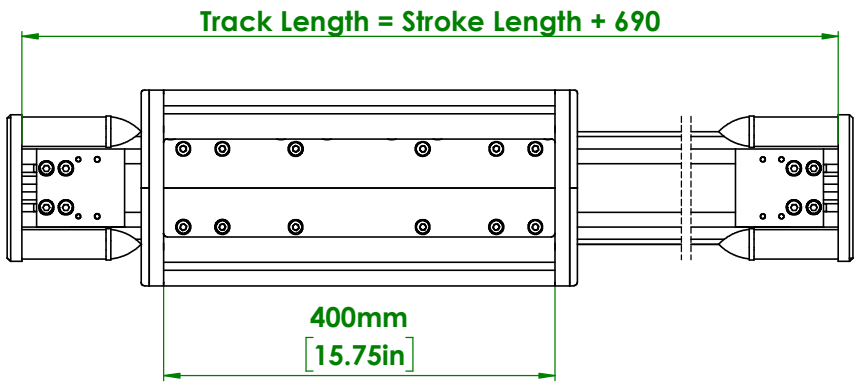


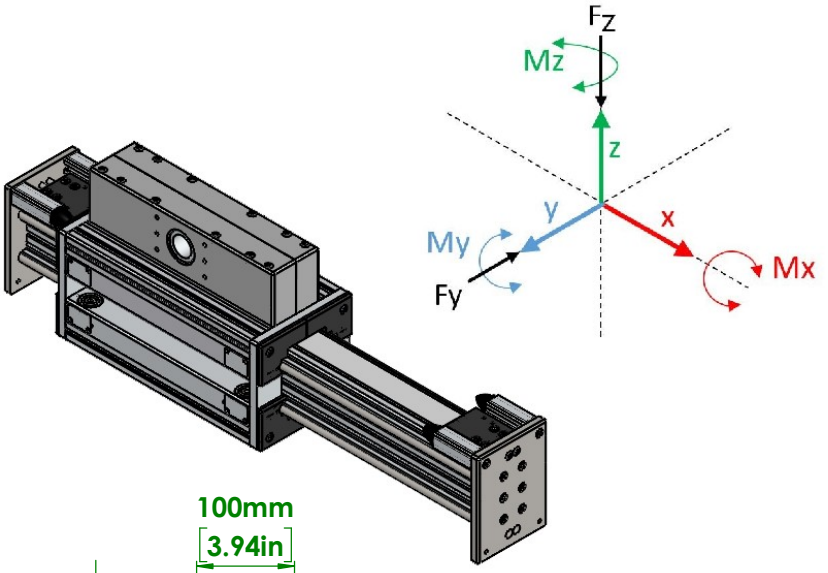


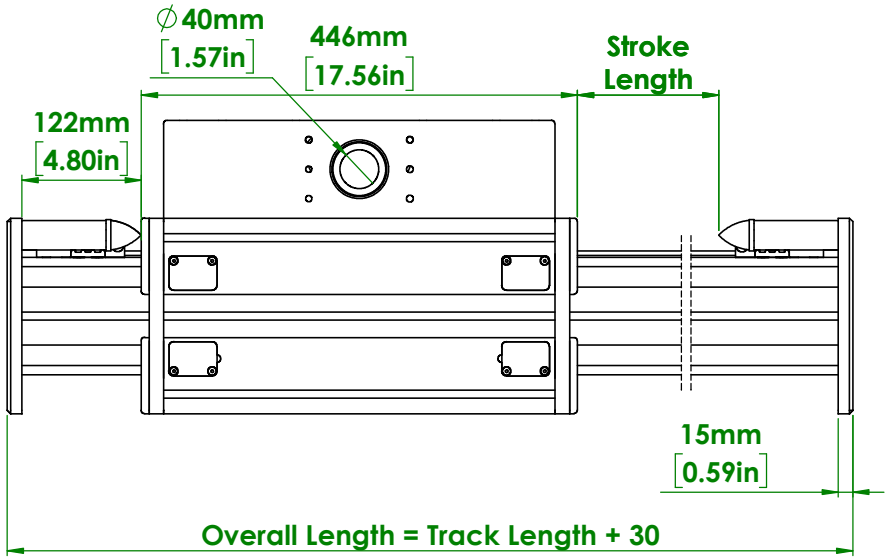


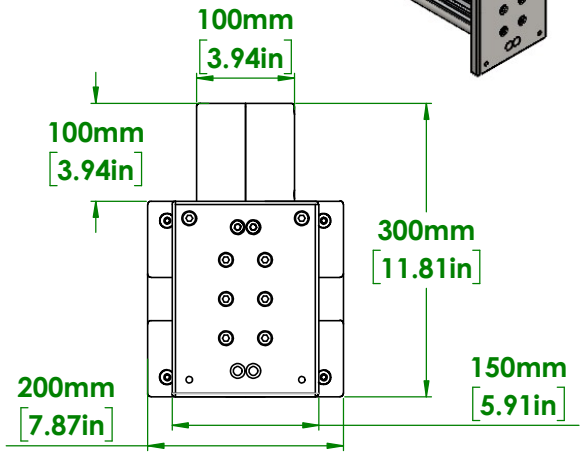


| Max Dynamic Load (N) | Static Axial Load (Fz)(N) | Static Radial Load (Fy)(N) | Static Moment Load (Mz)(Nm) | Static Moment Load (My)(Nm) | Static Moment Load (Mx)(Nm) |
|---|---|---|---|---|---|
| 2890 | 3700 | 3900 | 1000 | 500 | 150 |
| **Max Speed** | **Pulley Pitch Diameter (mm)** | **Pulley Torque (Nm)** | **Belt Tensile Strength (N)** | **Elongation** | **Carriage Weight (kg)** |
| 8 m/s | 89.13 | 120 | 8000 | .1% @ 2012 N | 31 |

Location: X:\ENGINEERING\DRAWINGS\SL\Maytec Actuator Library\

**PROPRIETARY AND CONFIDENTIAL**
THE INFORMATION CONTAINED IN THIS DRAWING IS THE SOLE PROPERTY OF PALETTI USA, LLC. ANY REPRODUCTION IN PART OR AS A WHOLE WITHOUT THE WRITTEN PERMISSION OF PALETTI USA, LLC IS PROHIBITED.

**UNLESS OTHERWISE SPECIFIED:**
DIMENSIONS ARE IN MILLIMETERS

STANDARD TOLERANCES:
ANGULAR: ±0.5 DEG
ONE PLACE DECIMAL: ±0.1
TWO PLACE DECIMAL: ±0.05

FINISH:
Saw Edge A
Side B
// 0.1 A
⊥ 0.1 B
32

| | NAME | DATE |
|---|---|---|
| MATERIAL: | DRAWN cwysocki | 4/13/2026 |

REVISIONS

| REV. | REASON | AUTHOR | DATE |
|---|---|---|---|

MayTec®
145 Keystone Drive
Montgomeryville, PA 18936
Phone: 267-289-0020

SIZE B | DWG. NO. PASL5227N

SCALE 1:20 | Sheet1 of 1