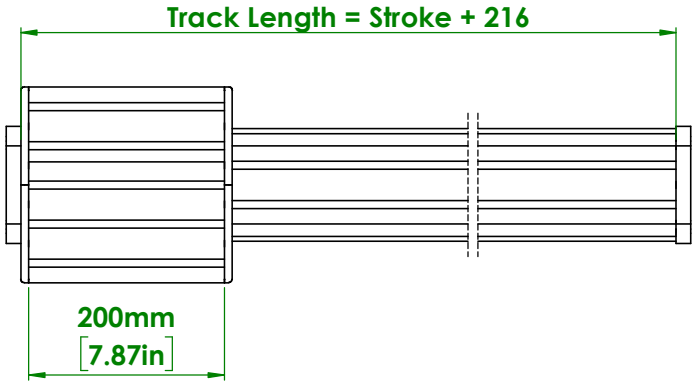

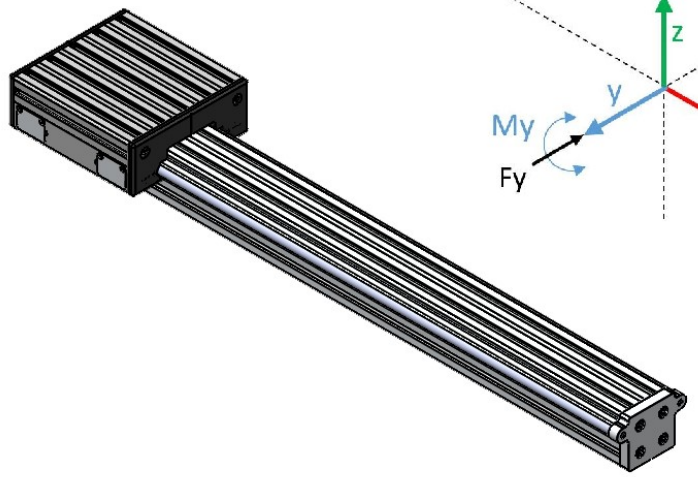

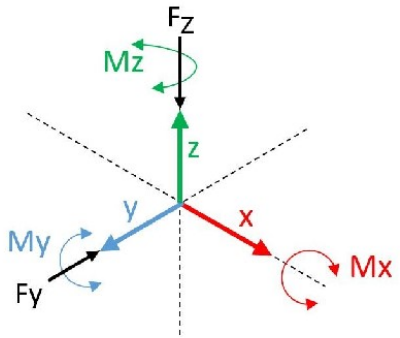

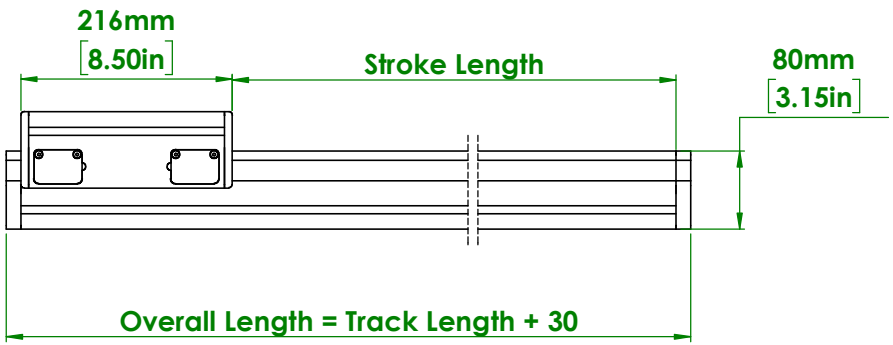

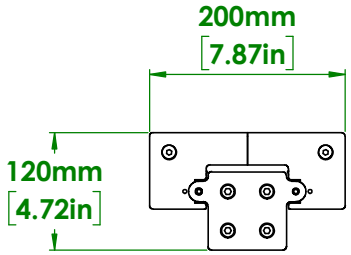

Max Dynamic Load (N)	Static Axial Load (Fz)(N)	Static Radial Load (Fy)(N)	Static Moment Load (Mz)(Nm)	Static Moment Load (My)(Nm)	Static Moment Load (Mx)(Nm)	Carriage Weight (kg)
1555	2000	3900	270	140	100	5.5

PROPRIETARY AND CONFIDENTIAL
THE INFORMATION CONTAINED IN THIS DRAWING IS THE SOLE PROPERTY OF PALETTI USA, LLC. ANY REPRODUCTION IN PART OR AS A WHOLE WITHOUT THE WRITTEN PERMISSION OF PALETTI USA, LLC IS PROHIBITED.

UNLESS OTHERWISE SPECIFIED:
DIMENSIONS ARE IN MILLIMETERS

STANDARD TOLERANCES:
ANGULAR: ±0.5 DEG
ONE PLACE DECIMAL: ±0.1
TWO PLACE DECIMAL: ±0.05

FINISH:
Saw Edge -A-
Side -B-
// 0.1 A
⊥ 0.1 B
32

	NAME	DATE
MATERIAL:	DRAWN cwysocki	4/13/2026

REVISIONS

REV.	REASON	AUTHOR	DATE

MayTec®
145 Keystone Drive
Montgomeryville, PA 18936
Phone: 267-289-0020

SIZE B | DWG. NO. PASL5150N

SCALE 1:10 | Sheet1 of 1

Location: X:\ENGINEERING\DRAWINGS\SL\Maytec Actuator Library\