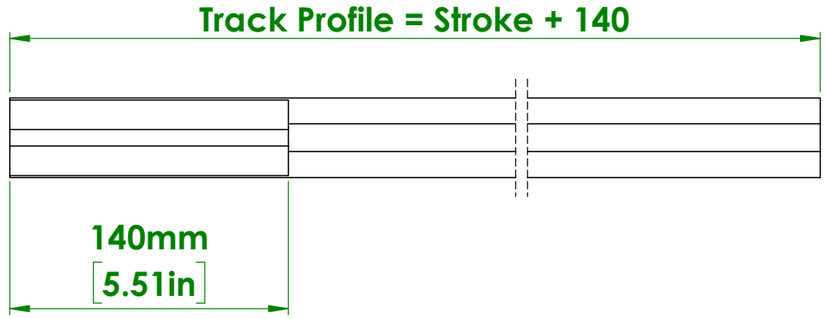

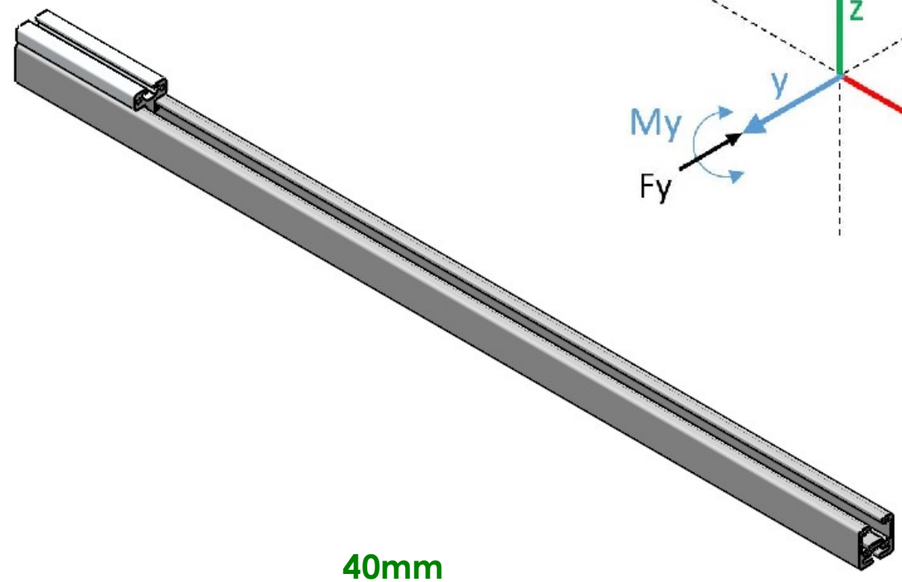

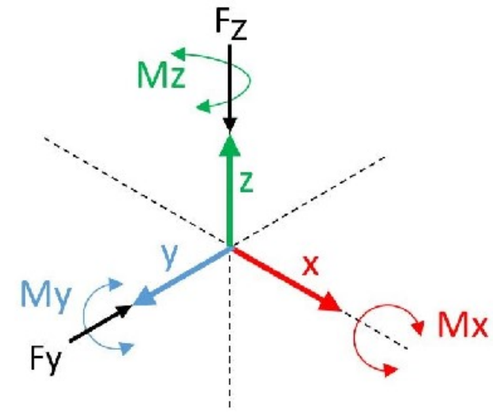

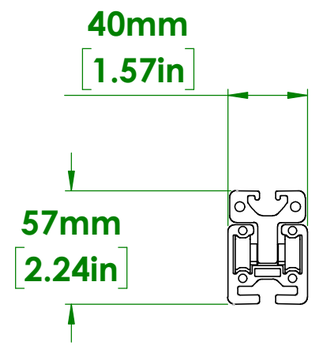

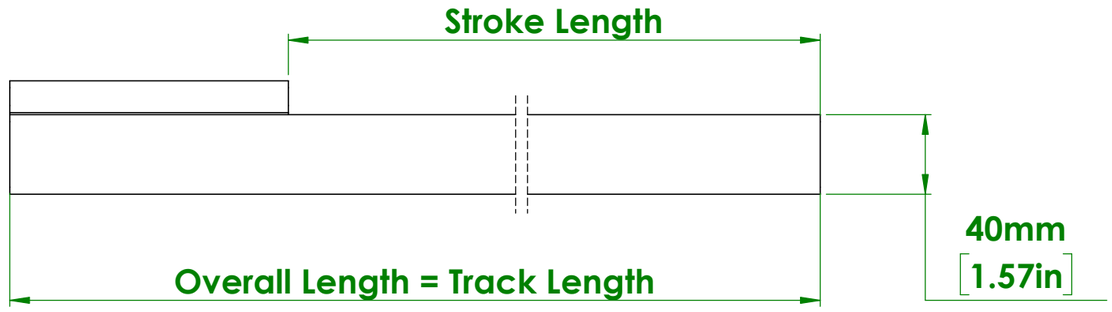

Max Dynamic Load (N)	Static Axial Load (Fz)(N)	Static Radial Load (Fy)(N)	Static Moment Load (Mz)(Nm)	Static Moment Load (My)(Nm)	Static Moment Load (Mx)(Nm)	Carriage Weight (kg)
45	NA*	35	35	NA*	NA*	0.4

*** Rollers can only be loaded radially**

PROPRIETARY AND CONFIDENTIAL
THE INFORMATION CONTAINED IN THIS DRAWING IS THE SOLE PROPERTY OF PALETTI USA, LLC. ANY REPRODUCTION IN PART OR AS A WHOLE WITHOUT THE WRITTEN PERMISSION OF PALETTI USA, LLC IS PROHIBITED.

UNLESS OTHERWISE SPECIFIED:
DIMENSIONS ARE IN MILLIMETERS

STANDARD TOLERANCES:
ANGULAR: ± 0.5 DEG
ONE PLACE DECIMAL: ± 0.1
TWO PLACE DECIMAL: ± 0.05

FINISH:
Saw Edge -A- // 0.1 A
Side -B- ⊥ 0.1 B
32 √

MATERIAL:

	NAME	DATE
DRAWN	cwysocki	4/13/2026

REVISIONS

REV.	REASON	AUTHOR	DATE

MayTec®
145 Keystone Drive
Montgomeryville, PA 18936
Phone: 267-289-0020

SIZE B | DWG. NO. PASL4009N

SCALE 1:10 | Sheet1 of 1

Location: X:\ENGINEERING\DRAWINGS\SL\Maytec Actuator Library\